SY750H

LARGE HYDRAULIC
EXCAVATOR

173,063 LBS OPERATING WEIGHT
524 HP GROSS HORSEPOWER
24' 10" MAX DIGGING DEPTH

SANY



DRIVING **PEAK PRODUCTIVITY**

EASY TO OWN, OPERATE, & SERVICE

INDUSTRY'S STRONGEST STANDARD WARRANTY

5-YEAR* 5,000 HOURS

*Warranty applies to 2026 Excavator and Wheel Loader models.

MADE FOR AMERICAN OPERATORS

In Kansas, a contractor runs a limestone quarry using the SY750H to remove overburden and dig down to the rock layers being mined. The power of the SY750H allows massive material movement, making the operation efficient and highly productive. Each cycle moves heavy loads while keeping trucks filled and the quarry advancing. The proven Cummins engine and smooth EH hydraulics deliver steady control while pushing limits across demanding conditions. A 5-year, 5,000-hour warranty protects the investment every hour, while support from the local dealer and the SANY America team keeps the machine ready when it matters most.

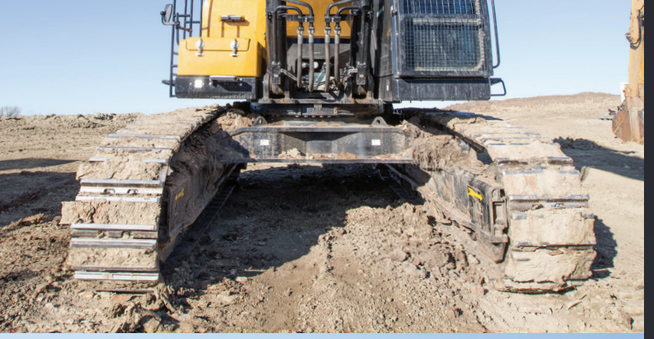









LC | LONG CHASSIS (LC)

The SY750H's long undercarriage provides a wide, stable footprint for digging and lifting, while the retractable track frame allows the machine to narrow for transport and extend for improved stability on the jobsite. Standard 600 mm double-grouser tracks reduce friction, making turning and tracking easier while reducing wear on undercarriage components.

| STICK CONFIGURATIONS

The SY750H offers both long and mass excavation stick options, allowing the machine to be accurately configured for its specific role. Each stick is paired with a matched boom to maximize reach or digging power, delivering optimized efficiency, breakout force, and overall performance across demanding production applications.

| COMPONENTS YOU TRUST

The SY750H is built with components by brands you know and trust. From Cummins to Kawasaki to Parker, you're getting a machine made with familiar, proven, reliable systems that offer ample support. It's an ecosystem of dependable components that make ownership easier.

| REMOVABLE COUNTERWEIGHT

The SY750H features a hydraulic removable counterweight that uses an onboard lift to lower the 27,000 lbs+ counterweight safely without additional equipment. This design simplifies transport, reduces permitting challenges, speeds mobilization, and makes moving the machine between jobsites faster, easier, and efficient.

| AUXILIARY HYDRAULICS

The SY750H Includes factory-installed auxiliary hydraulics: a high-flow primary circuit, a dedicated rotate circuit, and a case drain. The primary circuit supports one-way flow, two-way flow and continuous flow. All auxiliary pressure and flow settings are easily adjustable from the cab display.

264 GPM
on primary auxiliary circuit

A MACHINE THAT'S EASY TO OWN

The SY750H is designed for high-volume production, giving contractors the flexibility needed for major underground utilities, mass earthmoving, site development, and truck loading. With auxiliary hydraulics, factory hydraulic coupler plumbing, a retractable undercarriage, and a hydraulic removable counterweight, the SY750H makes swapping buckets and specialized attachments quick and simple, keeping changes fast and efficient while expanding capability without added complexity. Built with proven components from trusted suppliers, it delivers reliable performance you can depend on day after day. A reinforced undercarriage and chassis provide durability, stability, and safety in demanding environments. The SY750H is built to work hard, adapt to the job, and keep ownership simple for the long term.

RELIABLE FROM THE INSIDE OUT

Extended shifts, operator safety, and reliable revenue all depend on machinery you can count on. The SY750H is built for long-term toughness, engineered to perform through thousands of hours in demanding conditions. Its heavy-duty frame manages continuous digging and lifting loads, while the hydraulic system delivers consistent force, pressure, and power. The powertrain is designed to operate nonstop, keeping the pumps running all day without interruption. Every system is aimed at reducing downtime and increasing productivity. It's backed by a 5-year / 5,000-hour factory warranty, protecting your schedule with proven, field-tested dependability.



STRUCTURAL INTEGRITY

SANY machines don't cut corners on steel. We build each machine with the material it needs to deliver strength, stability and durability. Reinforced booms and sticks with internal ribbing add stiffness and rigidity, while the reinforced X-frame undercarriage is built to take a beating on the toughest terrain. In our state-of-the-art factories, robotic welding and CNC cutting ensure every part fits properly and is welded to last. Strict quality control then confirms the structural integrity meets our standards before it ever reaches your jobsite.

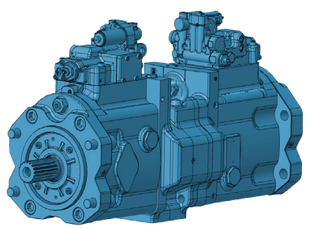

HYDRAULIC SYSTEM

The SY750H operates on an EH electronic hydraulic system, giving operators precise, responsive control through advanced machine management. Its high-performance hydraulics deliver fast cycle speeds, powerful breakout forces, and excellent lifting capability. Dual swing motors, adjustable auxiliary flow, a case drain, and a dedicated rotate circuit are all managed through the in-cab display as standard from the factory. And with Parker hydraulic components throughout, the system is engineered to withstand the extreme loads and demanding production work your operations require.

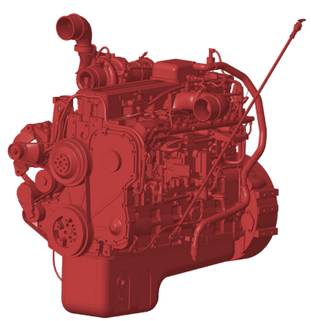

POWERTRAIN BY CUMMINS

Powered by a Cummins X15 StageV/Tier4F diesel engine with auto idle meets or exceeds EPA emissions regulations, the SY750H provides the efficiency and compliance your business needs. With 524 gross hp at 2,100 rpm, it delivers the power and torque to run day and night on the demanding jobsites. It's a powertrain you already know and trust—backed by a major support network—where parts, service and expertise are within reach. That means more uptime, less worry and a machine that works as hard as you do.

524

HORSE POWER

Gross horsepower @ 2,100 rpm by Cummins X15 StageV/Tier4F

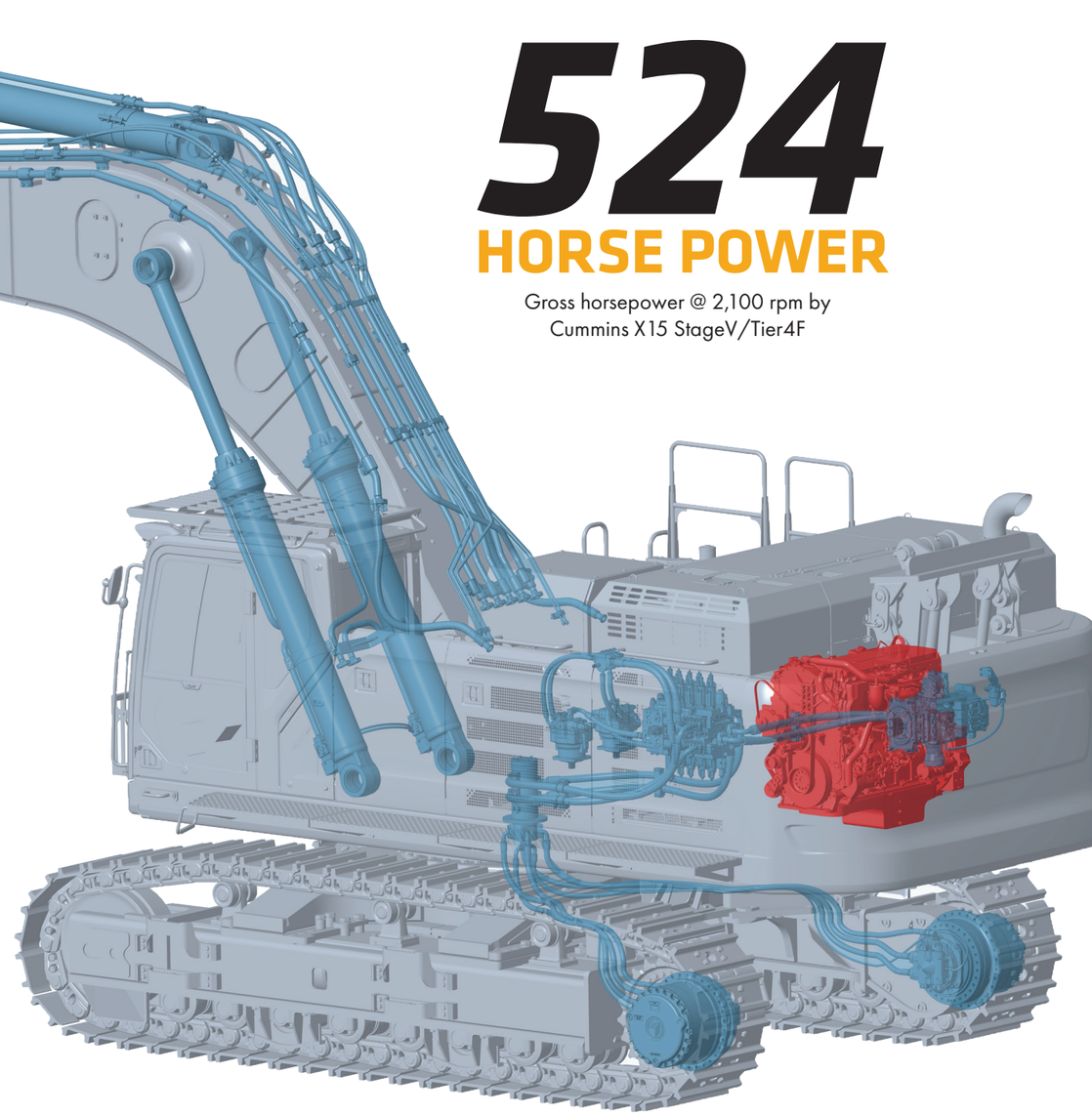



18+ FEATURES

specifically designed for operator and jobsite safety.

SAFETY PRIORITIZED

We design for safety first. Operators get secure handrails, steps, surround catwalk, antislip on top, OEM FOPS cab guarding, and multiple exit points with operator and ground level emergency shut off switches. A three-inch seatbelt and fire extinguisher add protection inside, while cameras, alarms, and 360° lighting enhance awareness for a safer jobsite.

SY750H

SANY

LARGE HYDRAULIC **EXCAVATOR**

173,063 LBS OPERATING WEIGHT
524 HP GROSS HORSEPOWER
24' 10" MAX DIGGING DEPTH

TECHNICAL SPECIFICATIONS

MACHINE DATA	STANDARD STICK	LONG STICK
Operating Weight*	173,063 lbs	180,000 lbs
Bolt-on Counterweight	27,116 lbs	27,116 lbs
Ground Pressure	14.6 psi	15.2 psi
Engine Model	Cummins X15 Stage V / Tier4F	
Displacement	909.3 in3	
Net Power	-	
Gross Power	524 HP	
Hydraulics	Positive Flow w/E-H Control	
Main Hydraulic Pump	Axial Piston – Variable Displacement	
Operating Flow (Max)	266.3 gal/min	
Operating Pressure (Max)	4,975 psi	
Auxiliary Flow	264 gpm	
Auxiliary Pressure	4,975 psi	
Travel Motor	Axial Piston with Park Brake	
Travel Pressure (Max)	4,975 psi	
Travel Speeds (Max)	1.8 / 2.8 mph	
Travel Effort (Max)	122,926 lbf	
Gradability	35°	
Swing Motor	Axial Piston with Swing Brake	
Swing Pressure (Max)	4,134 psi	
Swing Speed (Max)	7.2 RPM	
Undercarriage	Steel Track	
Track Shoe Width	26''/30''/35''	
Track Rollers	8	
Carrier Rollers	3	

WORKING SPECIFICATIONS

WORKING RANGE	STANDARD STICK	LONG STICK
Boom Length	23'	25' 7''
Stick (Arm) Length	9' 10''	11' 10''
A Maximum Digging Height	36' 2''	41' 3''
B Maximum Dumping Height	23' 6''	28'
C Maximum Digging Depth	24' 10''	28' 2''
D Maximum Vertical Wall Digging Depth	16'	22' 8''
E Maximum Reach at Ground Level	39' 8''	43' 4''
F Minimum Swing Radius	17' 8''	17' 8''
DIGGING PERFORMANCE	**STANDARD STICK**	**LONG STICK**
Boom Length	23'	25'7''
Stick (Arm) Length	9'10''	11'10''
Bucket Breakout Force (ISO)	92,172 lbf	92,172 lbf
Stick (Arm) Digging Force (ISO)	79,582 lbf	79,582 lbf

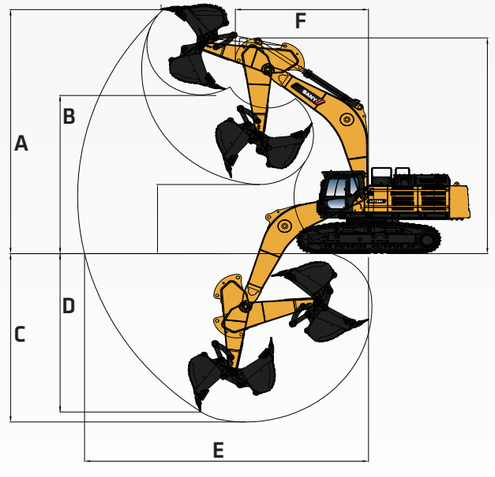

*Operating weight is for the SY750H with no attachments, and standard stick.

SANY America Inc. reserves the right to change these specifications at any time without prior notification. ©2026 SANY America Inc. HEXPS26SY750H001

LARGE HYDRAULIC EXCAVATOR SY750H

STANDARD FEATURES

ENGINE

- 14.9l Cummins X15
- Auto-idle
- Dual-element dry air filter
- Batteries 24V (2–12V)
- Coolant Expansion tank
- Electronic engine control
- Enclosed fan guard
- Engine coolant to –37 deg. C (–34 deg. F)
- Fuel filter with water separator
- Full-flow oil filter
- Turbocharger with charge air cooler
- High flow electric clutch actuated fan
- 500-hour engine-oil-change interval
- 70% (35 deg.) off-level capability
- Engine air precleaner
- Severe-duty fuel filter

HYDRAULIC SYSTEM

- Spring-applied, hydraulically released automatic swing brake
- Auxiliary hydraulic-flow adjustments through monitor
- Lift power boost on joystick
- Control pattern change valve
- Auxiliary hydraulics with 1 and 2-way combination piping for high flow
- Auxiliary hydraulics with 2-way rotation piping and controls
- Electro-hydraulic controls
- Quick coupler plumbing and control

UNDERCARRIAGE

- Planetary drive with axial piston motors
- Propel motor shields
- Spring-applied, hydraulically released automatic propel brake
- Track guides, front idler and 2 additional per side
- 2-speed travel selection
- Upper carrier rollers (3)
- Sealed and lubricated track chain
- Double semi-grouser shoes, 650 mm (25.6")
- Undercarriage frame opening guard

BOOM & STICK

- Boom 7.0 m
- Stick 3.0 m

UPPERSTRUCTURE

- Right-hand, left-hand counterweight mirrors
- Hydraulic removable counterweight (27,116 lbs)
- Vandal lock with key: Cab door / Service door / Toolbox / Cab Filter
- Debris screen in side panel
- Remote-mounted engine oil and fuel filters
- Bolt on catwalk

ATTACHMENTS

- Convenient grease points
- Centralized lubrication system

ATTACHMENTS CONTINUED

- Dirt seals on all bucket pins
- Oil-impregnated bushings
- Reinforced resin thrust plates
- Quick coupler
- Buckets: Heavy duty / Heavy-duty high capacity / Side cutter and teeth

OPERATOR'S STATION

- Adjustable independent-control positions (levers-to-seat, seat-to-pedals)
- AM/FM radio with USB charging and Bluetooth® connectivity
- Auto climate control/air conditioner/heater/pressurizer
- Built-in Operator's Manual storage compartment and manual
- 12V and 24V outlets 60 watt 5 amp
- Deluxe heated air suspension cloth seat with adjustable armrests
- Heavy duty rubber floor mat
- Front windshield wiper with intermittent speeds
- Touchcreen Monitor 10". Displays Fuel, DEF, Engine temp, Oil temp.
- Horn, electric
- Hour meter, electric. In touch screen.
- Hydraulic shutoff lever, all controls
- Interior light
- Digital Power mode selection: 3 power modes- low, standard, and high
- Digital tool selection: bucket, shear, hammer, etc.
- Multifunction color LCD monitor with: Diagnostic capability / Multiple-language / Maintenance tracking / Clock
- System monitoring with alarm features: Auto-idle indicator, engine air cleaner restriction indicator light, engine check, engine coolant temperature indicator light with audible alarm, engine oil pressure indicator light with audible alarm, low-alternator-charge indicator light, low-fuel indicator light, low DEF indication with audible alarm, fault code alert indicator, fuel-rate display, wiper-mode indicator, work-lights-on indicator, and work-mode indicator
- Motion alarm with cancel switch (conforms to SAE J994)
- Power-boost switch on right joystick
- Auxiliary hydraulic control switches in right console lever
- Seat belt, retractable
- Transparent overhead hatch
- Heated or cooled food/beverage storage
- Air-suspension heated seat
- Hydraulic oil filter restriction indicator light
- Protection screens for cab front, rear, and side

ELECTRICAL

- 60-amp alternator
- Ground level electrical disconnect (lockout tag out)
- Blade-type multi-fused circuits
- Positive-terminal battery covers
- Rearview & Blindside camera

LIGHTS

- Work lights: High power LED - 4 mounted on boom, 2 mounted on top of cab, 1 mounted under step on right side of machine

In the interest of continual equipment development, SANY America Inc. reserves the right to change these specifications at any time without prior notification.
©2026 SANY America Inc. HEXPS26SY750H001

LIFTING PERFORMANCE

Standard 23' Boom
Standard 9' 10" Stick
Standard 26"/30"/35" Track Shoes
No Bucket

Ratings are based on ISO 10567:2007. Lift capacity does not exceed 75% of tipping load with the machine on firm, level ground or 87% of hydraulic lifting capacity.

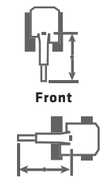

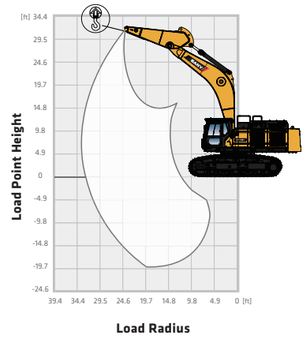

Standard Stick (9' 10")

B (HEIGHT)	10 FT		15 FT		20 FT		25 FT		30 FT		MAX. REACH		
LOAD POINT HEIGHT													MAX. FT
30 ft											38,017 lbs	38,017 lbs	24.2 ft
25 ft							37,340 lbs	37,340 lbs			36,608 lbs	36,608 lbs	27.8 ft
20 ft					68,917 lbs	58,453 lbs	39,194 lbs	39,194 lbs	36,286 lbs	36,286 lbs	36,149 lbs	36,149 lbs	30.2 ft
15 ft					50,753 lbs	50,753 lbs	42,177 lbs	42,177 lbs	37,364 lbs	37,364 lbs	36,143 lbs	30,801 lbs	31.6 ft
10 ft					56,562 lbs	56,562 lbs	45,279 lbs	45,279 lbs	38,801 lbs	33,204 lbs	36,359 lbs	29,273 lbs	32.2 ft
5 ft					60,144 lbs	60,144 lbs	47,532 lbs	47,532 lbs	39,813 lbs	32,463 lbs	36,804 lbs	29,070 lbs	32.0 ft
0 ft			64,946 lbs	64,946 lbs	60,737 lbs	60,737 lbs	48,178 lbs	41,026 lbs	39,635 lbs	32,020 lbs	37,247 lbs	30,005 lbs	31.0 ft
-5 ft	47,763 lbs	47,763 lbs	74,567 lbs	74,567 lbs	58,359 lbs	58,359 lbs	46,562 lbs	46,562 lbs			37,545 lbs	37,545 lbs	29.2 ft
-10 ft	80,885 lbs	80,885 lbs	65,859 lbs	65,859 lbs	52,525 lbs	52,525 lbs	41,326 lbs	41,326 lbs			37,379 lbs	37,379 lbs	26.3 ft
-15 ft			51,575 lbs	51,575 lbs	40,766 lbs	40,766 lbs					35,719 lbs	35,719 lbs	22.0 ft

Long Stick (11' 10")

B (HEIGHT)	10 FT		15 FT		20 FT		25 FT		30 FT		35 FT		MAX. REACH		
LOAD POINT HEIGHT															MAX. FT
35 ft													*36,222 lbs	*36,222 lbs	26 ft
30 ft									*34,061 lbs	*34,061 lbs			*34,039 lbs	*34,039 lbs	30.1 ft
25 ft									*34,039 lbs	*34,039 lbs			*32,959 lbs	*29,608 lbs	33 ft
20 ft					*46,738 lbs	*46,738 lbs	*39,639 lbs	*39,639 lbs	*35,273 lbs	*35,207 lbs	*32,628 lbs	*27,205 lbs	*32,430 lbs	*26,323 lbs	35.1 ft
15 ft					*53,110 lbs	*53,110 lbs	*42,990 lbs	*42,990 lbs	*37,060 lbs	*33,752 lbs	*33,245 lbs	*26,543 lbs	*32,210 lbs	*24,339 lbs	36.3 ft
10 ft					*58,710 lbs	*56,460 lbs	*46,187 lbs	*41,865 lbs	*38,845 lbs	*32,253 lbs	*33,995 lbs	*25,727 lbs	*32,165 lbs	*23,260 lbs	36.8 ft
5 ft					*61,729 lbs	*53,330 lbs	*48,369 lbs	*39,573 lbs	*40,102 lbs	*30,953 lbs	*34,414 lbs	*25,022 lbs	*32,210 lbs	*22,950 lbs	36.6 ft
0 ft					*61,795 lbs	*51,831 lbs	*48,987 lbs	*38,294 lbs	*40,410 lbs	*30,071 lbs	*33,937 lbs	*24,560 lbs	*32,254 lbs	*23,413 lbs	34.6 ft
-5 ft			*69,313 lbs	*69,313 lbs	*59,304 lbs	*51,478 lbs	*47,730 lbs	*37,743 lbs	*39,220 lbs	*29,718 lbs			*32,121 lbs	*24,802 lbs	34.2 ft
-10 ft	*68,255 lbs	*68,255 lbs	*66,645 lbs	*66,645 lbs	*54,322 lbs	*51,941 lbs	*44,181 lbs	*37,942 lbs	*35,670 lbs	*29,960 lbs			*31,504 lbs	*27,558 lbs	31.7 ft
-15 ft	*63,800 lbs	*63,800 lbs	*55,358 lbs	*55,358 lbs	*46,032 lbs	*46,032 lbs	*37,170 lbs	*37,170 lbs					*29,762 lbs	*29,762 lbs	28.3 ft
-20 ft			*38,228 lbs	*38,228 lbs	*31,879 lbs	*31,879 lbs							*24,912 lbs	*24,912 lbs	23.2 ft

In the interest of continual equipment development, SANY America Inc. reserves the right to change these specifications at any time without prior notification.
©2026 SANY America Inc. HEXPS26SY750H001

sanyamerica.com ||| SY750H

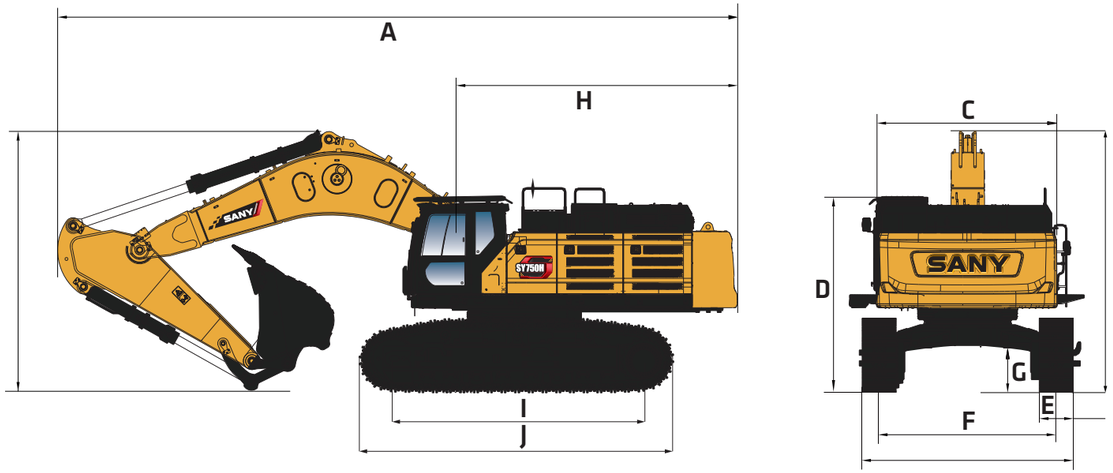

DIMENSIONS		STANDARD STICK	LONG STICK
	Boom Length	23’	25’ 7”
	Stick (Arm) Length	9’ 10”	11’ 10”
A	Transport Length	42’ 3”	44’ 6”
B	Transport Height	16’ 4”	11’ 10”
C	Upper Structure Width	14’ 8”/11’ 5” (with/without catwalk)	
D	Cab Height	12’ 5”	
E	Track Width	26”/30”/35”	
F	Track Gauge–Retracted	9’ 2”	
	Track Gauge–Extended	11’	
	Undercarriage Width–Retracted	11’ 3”/11’ 7”/12’	
	Undercarriage Width–Extended	13’ 3”/13’ 7”/14’ 1”	
G	Ground Clearance	2’ 11”	
H	Tail Swing Radius	13’ 8”	
I	Track Length on Ground	15’ 8”	
J	Track Length	19’ 8”	

SERVICE REFILL CAPACITIES	
Fuel Tank Capacity	184 gal
DEF Tank Capacity	23.4 gal
Hydraulic Tank Capacity	100.4 gal
Engine Oil Capacity	13.7 gal
Cooling System Capacity	19.7 gal

In the interest of continual equipment development, SANY America Inc. reserves the right to change these specifications at any time without prior notification.
©2026 SANY America Inc. HEXPS26SY750H001

INDUSTRY’S STRONGEST STANDARD WARRANTY | 5-YEAR* 5,000 HOURS

*Warranty applies to 2026 Excavator and Wheel Loader models

SANY America Inc. 318 SANY Way
Peachtree City, Georgia 30269
470.552.SANY sanyamerica.com

CONNECTED, **INFORMED**, IN CONTROL
TECHNOLOGY

CONNECTED EVI TELEMATICS

EVI is SANY’s proprietary telematics platform and is available through your local dealer on excavators. This dashboard lets you track and geofence the machine, view reports on consumption and run time, monitor error codes and manage your SANY fleet—all with more features continually being launched to keep you connected and in control.

GRADE CONTROL COMPATIBLE

The SY750H works with most major 3D indicate grade control systems, giving operators better accuracy and faster results. This compatibility helps reduce rework, improve efficiency and keep production moving—so your machine delivers more value on every job.

INFORMATION AT YOUR FINGERTIPS

The 10-inch touchscreen display is the operator’s hub, showing key machine metrics like fuel and DEF levels, engine and hydraulic temperatures, service codes and more. It also displays multiple camera views, allows quick adjustment of HVAC, and radio while also supporting Bluetooth hands-free calling, operator presets, and attachment configuration—all in one easy-to-use central command center.



BUILT **AROUND THE**
OPERATOR



CUSTOM OPERATOR ERGONOMICS

The 16-way adjustable air-ride seat gives operators complete control over their seating position—height, distance, and angle—so they can align perfectly with the joysticks and foot pedals. This precise adjustablity supports better control and a more comfortable working posture all day long.

OPTIMAL JOBSITE AWARENESS

Large glass panels, sliding side windows, and integrated backup and blind-side cameras give operators a clear view of their surroundings. With added surround-view mirrors, they can confidently and safely control the machine on the jobsite.

16 POINTS
of seat adjustablity plus heated and cooled functions.

DESIGNED FOR **COMFORT**
ALL SHIFT LONG

This spacious cab is built for comfort and intuitiveness with safety and ergonomics at the core. The seat offers 16 adjustment points to achieve the ideal position plus heated and cooled functions for all-day comfort. SANY's E-panel places common functions within easy reach and the touchscreen display serves as the control hub. Upgraded HVAC keeps the cab comfortable in any weather, while Bluetooth connectivity and improved noise isolation allow clear hands-free calls. Large glass panels maximize visibility of the work area, helping operators stay confident and productive throughout the shift.

INTENTIONALLY **ENGINEERED FOR SERVICE**

UPTIME IS OUR PRIORITY

With fast diagnostics, streamlined repairs and software tools for remote support it's easy to keep your SANY excavator running strong. Our local dealer network, stretching across North America, provides quick response and maximizes your productivity.

DEDICATED TO SUPPORT

We're expanding our U.S. footprint with local engineering, quality assurance and service teams—backed by a multi-year investment in support, training, and parts.

EASE OF ACCESS

Its spacious compartments offer ample room for tools, filters, and components, ensuring efficient inspections and replacements that minimize downtime on the job site.

FAST DAILY PRE-CHECKS

Machines are designed so operators can safely and easily inspect critical systems—mostly from the ground—for quick visual and manual checks.

PARTS ON THE SHELF READY TO SHIP

We continually expand parts inventory across our major North American distribution centers and improve forecasting to keep high-demand components in stock. This longterm strategy ensures critical parts are ready to ship when they're needed most.







WE'VE GOT **YOUR BACK**

At SANY, we see every customer as a relationship whose success is directly tied to ours. We focus on keeping you productive, because when your machines are running, your business is winning. Our warranty support, faster claim approvals are built to protect your operations not just your equipment. Your feedback fuels continuous improvement—real updates to software, hydraulics, and performance through close collaboration with key suppliers. With expanding U.S. support, trained technicians, ongoing investments, and stronger parts availability, we stay by your side so your business can keep moving forward.



CUSTOMERS FIRST ALWAYS

At SANY America, everything begins with you. We design machines that make your work safer, more efficient, and more profitable—and we stand behind them with U.S.-based support you can count on. From ergonomic cabs and superior visibility to quick daily checks and dependable uptime, every feature is engineered around real operator needs and real jobsite demands. Your feedback directly drives our product improvements, accelerating software updates, hydraulic refinements, and long-term durability enhancements. With expanding American facilities, local engineering and service teams, certified technicians, and three parts distribution centers nationwide, we operate as your committed business partner—focused on your success today and every day ahead.

INDUSTRY'S **STRONGEST** STANDARD WARRANTY

SANY America delivers the most comprehensive standard warranty in the industry—protecting your investment from day one.

- **5 years / 5,000 hours of full machine coverage included with every excavator**
- **Lower total operating risk and fewer unexpected costs over machine life**
- **Confidence in long-term durability backed by factory engineering and testing**
- **Stronger coverage than leading OEM competitors – standard, not add-on**

Choosing SANY means choosing equipment built to work—and a partner committed to standing behind your success.

FINANCING THAT WORKS AS HARD AS YOU DO

Smart financing that makes owning SANY equipment faster, easier, and affordable.

- **Quick approvals – many customers approved in under 5 minutes**
- **Simple mobile app for secure document signing and easy payment management**
- **Flexible terms and competitive promotions, including 0% for 60 months**
- **Faster approvals for repeat customers to keep your fleet growing**
- **Top-rated experience with a 4.95 out of 5 Trustpilot score**

Financing with SANY is built to support your business growth every step of the way.

TOTALCOST OF OWNERSHIP

SANY machines are engineered to deliver a stronger return on investment by lowering the true cost of ownership over the life of your equipment.

- **Fuel-efficient performance reduces operating costs every hour the machine runs**
- **Extended service intervals minimize downtime and maintenance expense**
- **Parts cost management keeps replacement and wear items affordable**
- **High resale value helps protect your investment over time**
- **More standard features from the factory reduce the need for costly add-ons**

Every detail is designed to help you earn more, spend less, and get maximum value from every machine you own.



SANY America Inc.
318 SANY Way
Peachtree City | GA 30269
T | 470-552-SANY

BRHEX26SY750H001

sanyamerica.com

In the interest of continual equipment development, SANY America Inc. reserves the right to change these specifications at any time without prior notification.

© 2026 SANY America Inc.